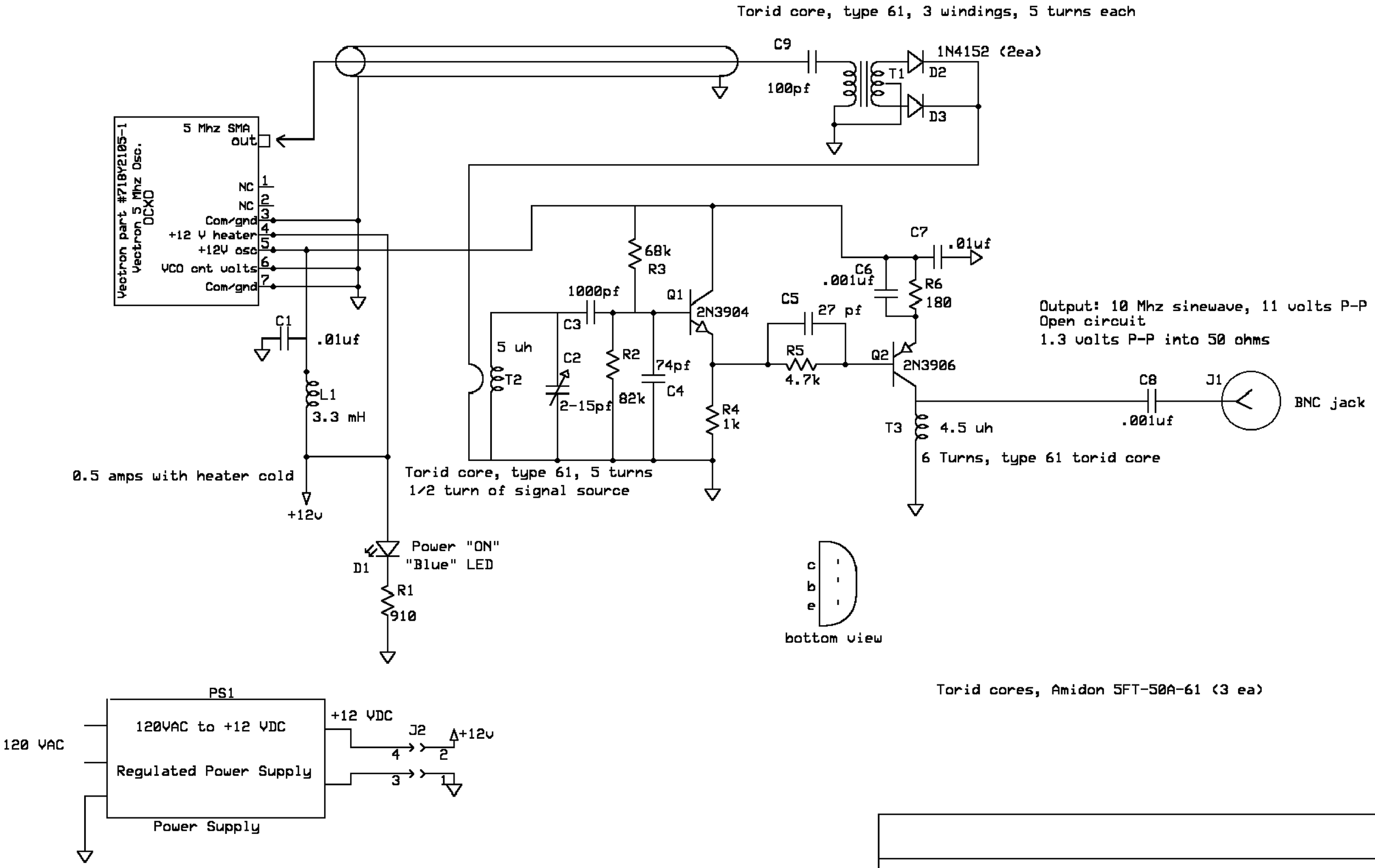

10 Mhz Reference Oscillator		
Neil Robin	Rev 3.0 12/31/08	Page # 1 or 1